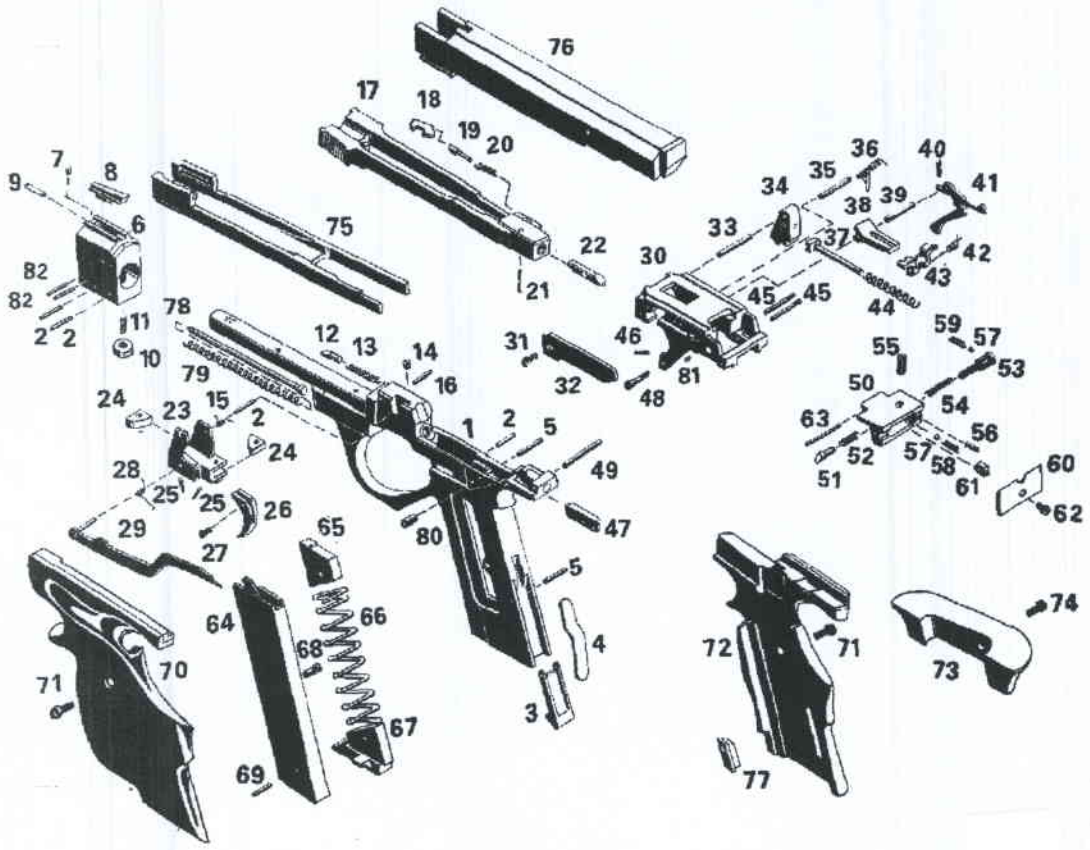

IZH 35 M

Pistol Parts.

Fig. 1